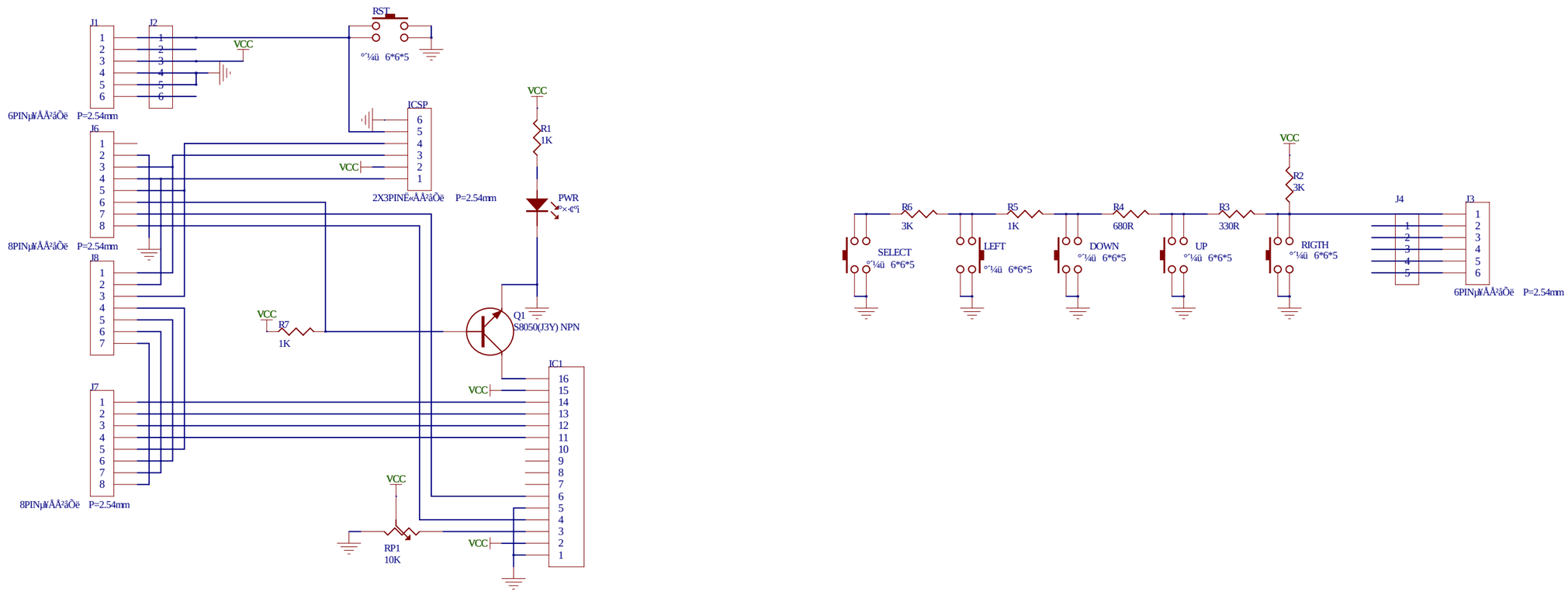

Title		
Size	Number	Revision
Date:		Sheet of
File:		Drawn By: